Ultraviolet selective thin film sensor

TW30DZ

Features

- Schottky-type photodiode
- Intrinsic visible blindness due to wide-bandgap semiconductor material
- Built-in filter glass for low sensitivity above 400nm
- Large photoactive area
- No focusing lens needed, therefore large usable incident angle
- Designed to operate in photovoltaic mode
- TO-46 metal package

Maximum Ratings

Parameter	Symbol	Value	Unit
Operating temperature range	T_{opt}	-20 ... +80	°C
Reverse voltage	V_{Rmax}	3	V
Forward current	I_{Fmax}	1	mA
Total power dissipation at 25°C	P_{tot}	1	mW

For price, delivery, and to place orders, please contact sglux in Germany at
sglux GmbH, Ostendstr. 25, 12459 Berlin, Tel. +49 30 5301 5211, Fax +49 30 5301 5209
or visit our website: www.sglux.de

General Characteristics

(T_a = 25 °C)

Parameter	Symbol	typ. Value	Unit
Active area	A	4.18	mm^2
Active area dimensions	L x W	2.2 x 1.9	mm^2
Max. viewing angle	α	app. 70	degree
Shunt resistance (dark)	R_s	40	MΩ
Dark current at 10mV reverse bias	I_d	30	pA
Open circuit voltage (200µW/cm^2, λ=300nm)	V_0	120	mV
Short circuit current (200µW/cm^2, λ=300nm)	I_0	160	nA
Breakdown voltage (dark)	V_{BR}	> 3	V

Spectral Characteristics

(T_a = 25 °C)

Parameter	Symbol	typ. Value	Unit
Max. spectral sensitivity	S_{max}	20	mA W^{-1}
Wavelength of max. spectral sensitivity	λ_{Smax}	300	nm
Range of spectral sensitivity ($S=0.1*S_{max}$)	-	253-361	nm
Visible blindness	$\frac{S_{max}}{S_{400\,nm}}$	>1.000	

For price, delivery, and to place orders, please contact sglux in Germany at
sglux GmbH, Ostendstr. 25, 12459 Berlin, Tel. +49 30 5301 5211, Fax +49 30 5301 5209
or visit our website: www.sglux.de

Spectral Response

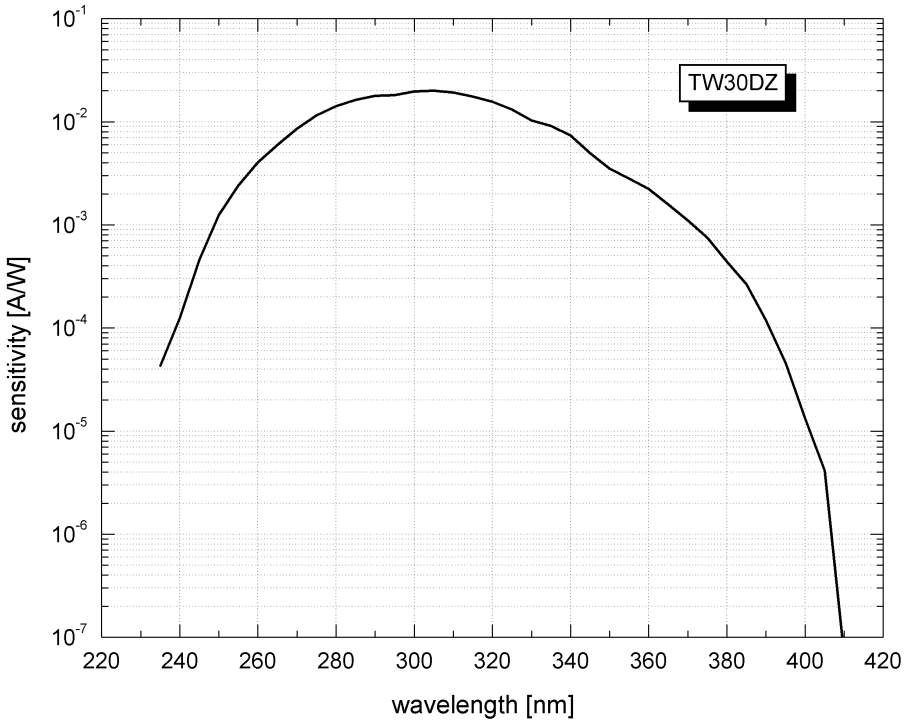

Pin Layout

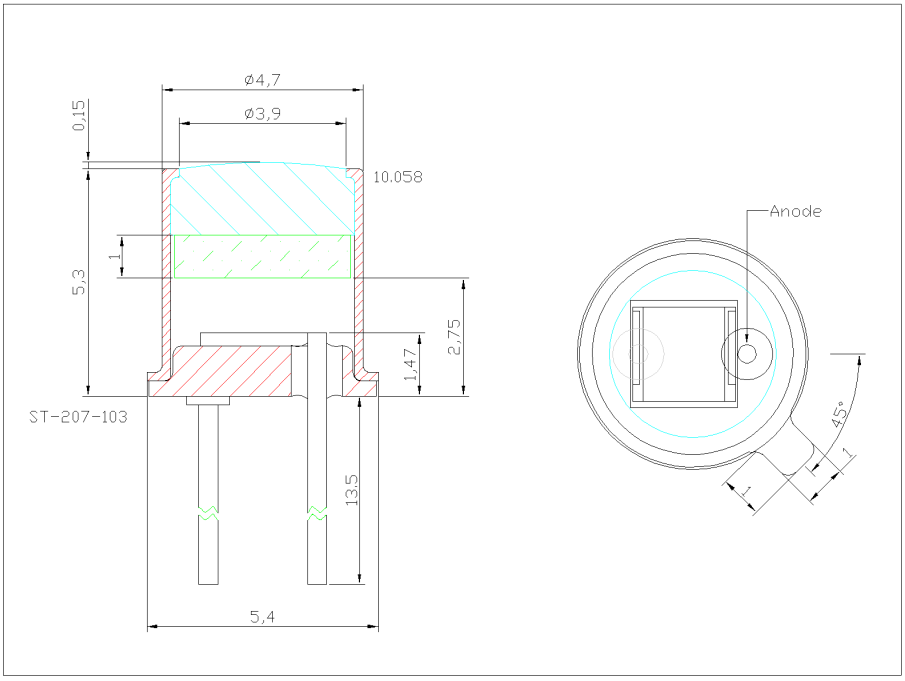

For price, delivery, and to place orders, please contact sglux in Germany at
sglux GmbH, Ostendstr. 25, 12459 Berlin, Tel. +49 30 5301 5211, Fax +49 30 5301 5209
or visit our website: www.sglux.de